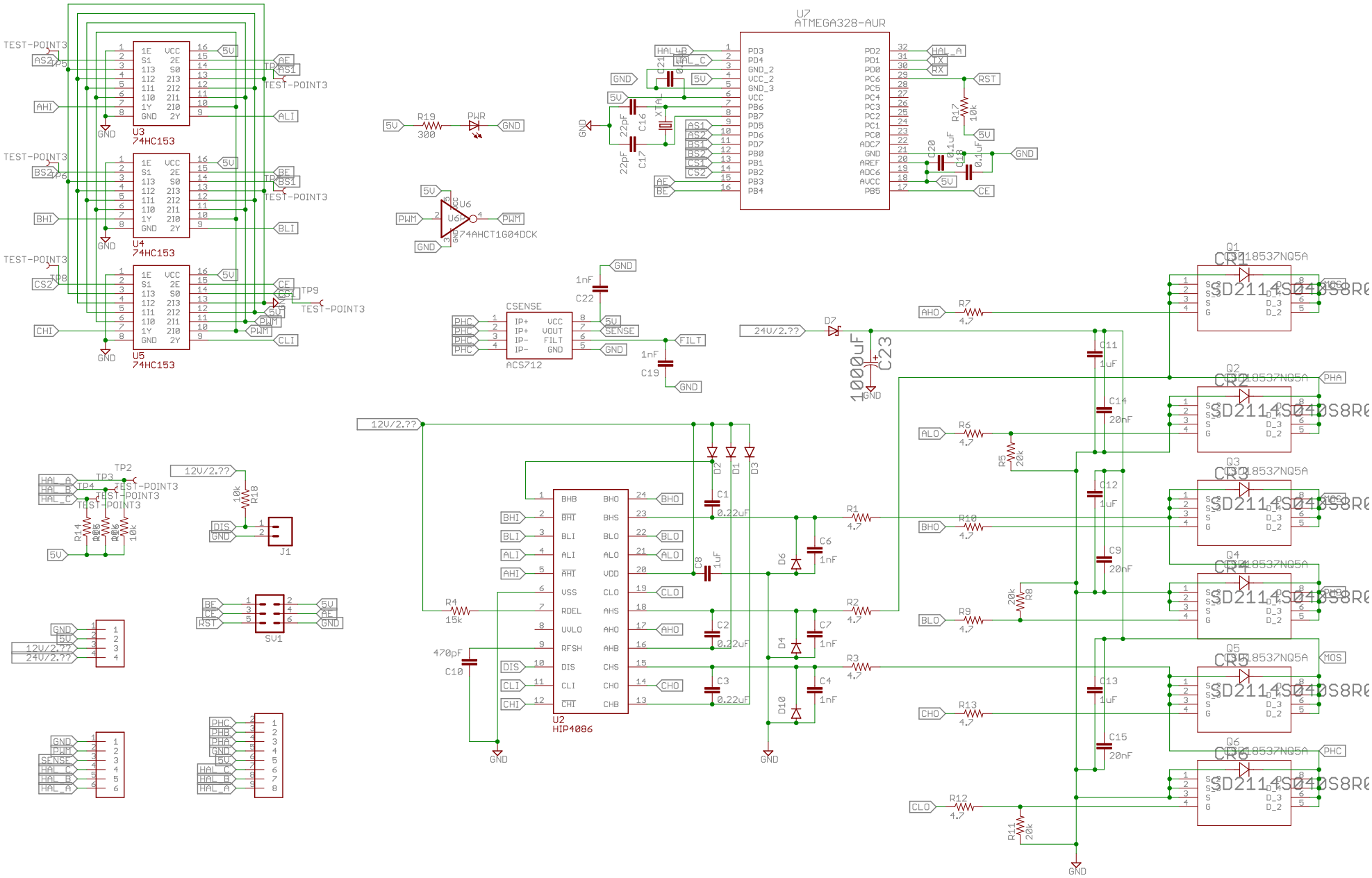
U3
74HC153
U4
74HC153
U5
74HC153
U7
ATMEGA328-AUR
U6
74AHCT1G04DCK
U2
HIP4086
CSENSE
ACS712
Q1
Q2
Q3
Q4
Q5
Q6
CRD2114S040S8R0
J1
SV1
TEST-POINT3
R19
300
PWR
R17
10k
C16
22pF
C17
22pF
C18
0.1uF
C19
1nF
C22
1nF
C23
1000uF
D7
24V/2.??
12V/2.??
R18
10k
R14
10k
R15
10k
R16
10k
R4
15k
C10
470pF
C1
0.22uF
C2
0.22uF
C3
0.22uF
C8
1uF
R1
4.7
R2
4.7
R3
4.7
R7
4.7
R10
4.7
R9
4.7
R13
4.7
R12
4.7
R5
20k
R8
20k
R11
20k
C11
1uF
C12
1uF
C13
1uF
C14
20nF
C9
20nF
C15
20nF
C6
1nF
C7
1nF
C4
1nF
D1
D2
D3
D4
D6
D10
GND
5V
FILT
SENSE
PWM
MOS
PHA
PHB
PHC
CE
RST
TX
RX